Interactive comments on "Model study on potential contributions of the proposed Huangpu Gate to flood control in Taihu Lake basin"

By Zhang Hanghui et al.
Liu Shuguang et al.
liusgliu@tongji.edu.cn

We appreciate the comments from the reviewer very much, and truly believe these comments can help us to improve the quality of our manuscript. We hope the manuscript after modification would achieve publication status. We provide responses to the main and specific comments and technical corrections in sequential order as follows.

Specific Comments:

(1) Page 1 Line 26: what is the meaning of 327? Is it the page number? Please consider changing the format of the citation. Please also check other places (e.g., Page 3 Line 9).

(2) Page 2 Line 5: "Balica et al., 2012" cannot be found in the reference list.

(3) Page 2 Line 25: "Yao & Chen, 1999" cannot be found in the reference list.

(4) Page 3 Line 22: the author mentioned the long-term average. Please specify which period was used to calculate the long-term average.

(5) Page 3 Line 32: flux is defined as the flow per unit area per time, but the unit here for flux is "m3".

(6) Page 4 Line 10: "Duinker and Greig (2007)" cannot be found in the reference list.

(7) Page 4 Line 20: please add the reference for the HOHY model.

(8) In the model description section, the authors mentioned that the original HOHY model was modified to consider the effects of the proposed estuary gate. But there is no information regarding how the modification has been done on the model and what is the main difference between the modified and original model. Please provide more details on this point. In addition, there is no description on which parameters in the model need to be tuned for the calibration.

(9) Page 4 Line 27: please provide more details on the runoff-generation processes for different surface types.

(10) Page 5 Line 3-4: please provide more details on how the water-engineering works are taken into account in the simulation.

(11) The calibration period in this study is from 1984 to 1987, but the verification period is 1995 and 1996. Does the model consider the changes of the underlying surface conditions? e.g., the land use land cover change.

(12) Page 5 Line 17: please specify which period is used to calculate "the peak value of lake level".

(13) Most of the analysis in this study focused on the simulation of lake levels. Is it possible to show how the inundation area is reduced due to the proposed gate?

(14) Figure 1: The quality is very low and it is difficult to figure out the location of stations.

(15) Figure 2 & 3: please (1) increase the resolution of the figures; (2) provide some metrics (e.g., RMSE and R2) to evaluate the model performance; (3) give the unit for the y-axis; (4)in the figure caption, as the observation and simulation have different colors, I prefer to use color instead of "solid"/"dash".

(16) Figure 4 & 5 & 6: please (1) increase the resolution; (2) put a horizontal line indicating the design level in the figure.

(17) Table 2: please specify the date in the caption. Is it 1999?

(18) Table 3: where are these representative stations in Figure 1? What's the unit?

(19) Why chose 7 days in advance for scenario A1? Any particular reasons? Is the number based on some operational rules?

(20) Table 5: (1) how to calculate the times to close the gate? (2) I think the following equation is valid: net outflow = total outflow - tide intrusion. But why the numbers in the table do not meet this equation? Any explanation for this?

Responses to Specific Comments:

(1) Page 1 Line 26: what is the meaning of 327? Is it the page number? Please consider changing the format of the citation. Please also check other places (e.g., Page 3 Line 9).

Yes, 327 is the page number. We have changed the format of the citation of our manuscript.

(2) Page 2 Line 5: "Balica et al., 2012" cannot be found in the reference list.

"Balica et al., 2012" is in Page 9 Line 18 of our original manuscript. We have exchange the order of the first author's family name and given name. Please find it in Page 10 Line 28 of our new manuscript.

(3) Page 2 Line 25: "Yao & Chen, 1999" cannot be found in the reference list.

"Yao & Chen, 1999" has been changed to "Shao and Yao, 1999"（ Page 12 Line 1）.

(4) Page 3 Line 22: the author mentioned the long-term average. Please specify which period was used to calculate the long-term average.

The long-term average used is a nearly sixty-year period 1954- 2010. Please find it in Page 3 Line 27.

(5) Page 3 Line 32: flux is defined as the flow per unit area per time, but the unit here for flux is "m3".

We have already deleted this sentence and reorganized. Please find it in Page 3 Line 39 to Page 4 Line 2.

(6) Page 4 Line 10: "Duinker and Greig (2007)" cannot be found in the reference list.

"Duinker and Greig (2007)" is in Page 9 Line 15 of our original manuscript. We have exchange the order of authors' family name and given name. Please find it in Page 11 Line 4 of our new manuscript.

(7) Page 4 Line 20: please add the reference for the HOHY model.

"Cheng et al. (2006)" is the main reference book which provides a lot of information about the HOHY model listed in the reference of our manuscript (Page 10 Line 35). We have added some necessary and important information of this model, including its development process, schematization and application. Please find it in "3.2 Model development" and Figure 2.

(8) In the model description section, the authors mentioned that the original HOHY model was modified to consider the effects of the proposed estuary gate. But there is no information regarding how the modification has been done on the model and what is the main difference between the modified and

original model. Please provide more details on this point. In addition, there is no description on which parameters in the model need to be tuned for the calibration.

We have added a lot of modification details of this model, including the flowchart and test of the extended Fortran program. Please find it in "3.2 Model development" and Figure 5-7.

The model extension focuses on the flood routing part, related to the algorithms of unsteady open channel flow, and the inputs of control rules of the gates related to the tidal conditions. The main program was improved by adding a function to judge the stage of tide before running the gates (i.e. in flood or ebb tide), which makes the specification of the gate's control rules more flexible. The original program is modified according to the flowchart given in Fig. 5.The modified model is tested by using a simple example, where the tide threshold is assumed to be 4.0m, with the simulation results illustrated in Figure.6 and Figure 7.

(9) Page 4 Line 27: please provide more details on the runoff-generation processes for different surface types.

"Cheng et al. (2006)" is the main reference book which provides a lot of information about the HOHY model listed in the reference of our manuscript (Page 10 Line 35), more details can be found in Chapter 2 of this book. In addition,"Jin. (2008), page 49-51" also provides the details on the runoff-generation processes for different surface types. Simple explanations are as follows:

a) Water Surface

Runoff production of water surface is the rainfall excess, which can be expressed as the difference between the precipitation and evaporation.

b) Paddy Field

The amount of water which paddies need is changing in different growing periods. Its runoff production changes according to the previous water level.

c) Non-irrigated Farmland

As a plain area with abundant river networks, its ground water table is comparatively high. A model named "runoff yield under saturated storage" is used for calculation.

d) Constructed Ground

These grounds are weak at infiltration. Their runoff production can be simplification as the product of the precipitation and coefficient.

(10) Page 5 Line 3-4: please provide more details on how the water-engineering works are taken into account in the simulation.

"Cheng et al. (2006)" is the main reference book which provides a lot of information about the HOHY model listed in the reference of our manuscript (Page 10 Line 35), more details can be found in Chapter 4 of this book. In addition,"Jin. (2008), page 53-55" also provides the details on the simulation of water-engineering works.

In the Taihu Basin, hydraulic structures are mainly weirs, sluice gates, and pump stations. Different structures have different governing equations. For example, simple explanations are as follows:

a) Broad-crested weir:

Free flow: $Q = \mu e B\sqrt{2g(H_0 - h_t)}$

Submerged flow: $Q = \varphi_m B(Z_2 - Z_d)\sqrt{2g(Z_1 - Z_2)}$

b) Broad-crested weir with sluice gate:

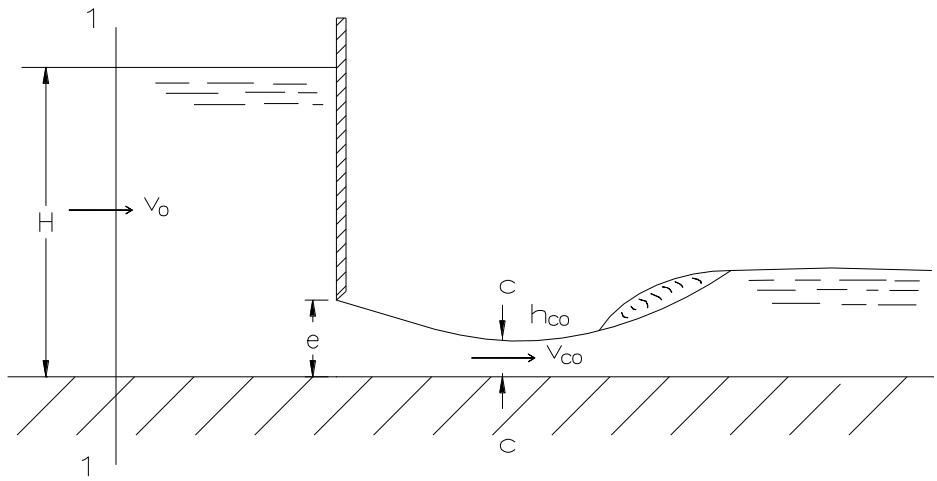

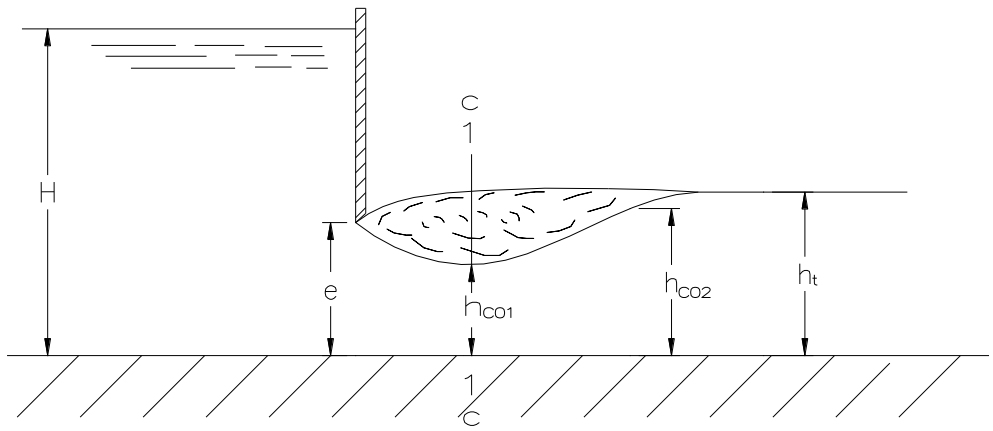

Schematic Diagram of "Broad-Crested Weir with Sluice Gate"

Free flow: $Q = \varepsilon'\varphi eB\sqrt{2g(H_0 - h_{co})}$

Submerged flow: $Q = \mu eB\sqrt{2g(H_0 - h_t)}$

c) Practical weir with sluice gate:

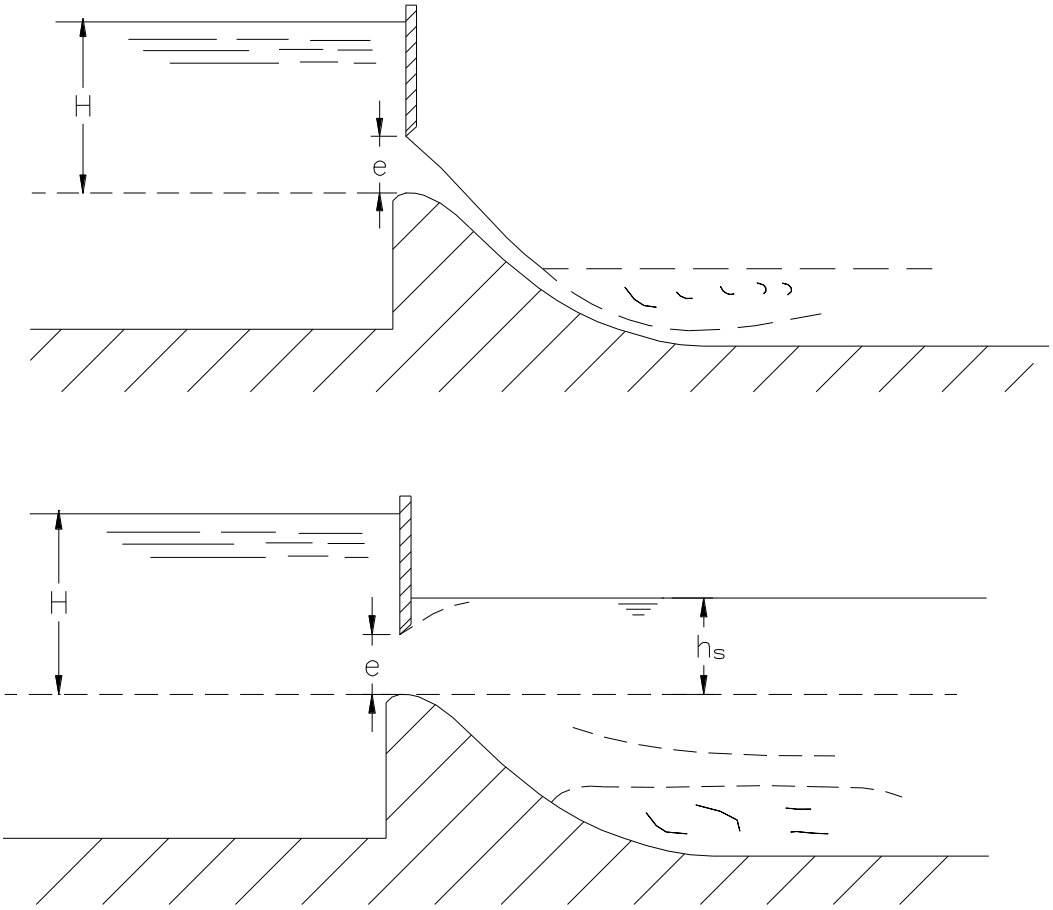

Schematic Diagram of "Practical Weir with Sluice Gate"

Free flow: $Q = \mu_1 eB\sqrt{2gH_0}$

Submerged flow: $Q = \mu_1 eB\sqrt{2g(H_0 - h_s)}$

(11) The calibration period in this study is from 1984 to 1987, but the verification period is 1995 and 1996. Does the model consider the changes of the underlying surface conditions? e.g., the land use land cover change.

According to the interpretation of the Taihu lake basin in 1985, 1995 and 2000 by Nanjing Institute of Geography and Limnology, Chinese Academy of Sciences, the land use changed little between the end of the 1980s and the beginning of the 1990s.

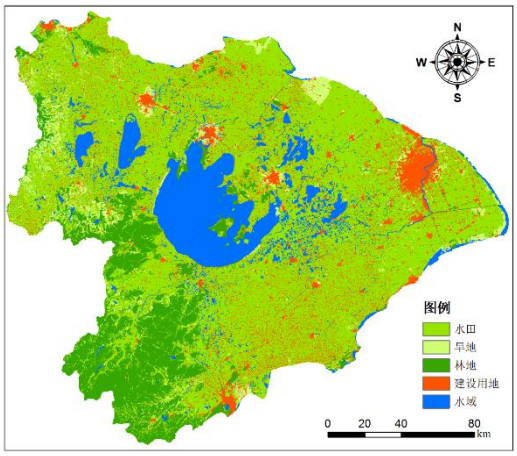

the year of 1985

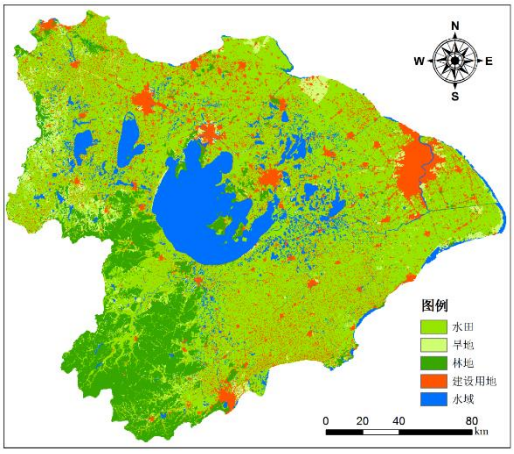

the year of 1995

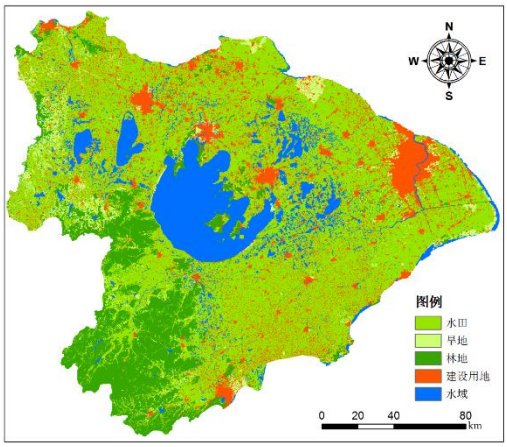

The year of 2000

(12) Page 5 Line 17: please specify which period is used to calculate "the peak value of lake level".

The period used to calculate the peak value of lake level from June 1st to August 31st, 1999, which was also mentioned in "Page 5 Line 18" of our original manuscript.

(13) Most of the analysis in this study focused on the simulation of lake levels. Is it possible to show how the inundation area is reduced due to the proposed gate?

It is a pity we cannot provide the inundation area reduced due to the proposed gate. In generally, the inundation area is calculated by 2-D hydrodynamic model while the HOHY model is a hydrodynamic model for 1-D unsteady open channel flow.

(14) Figure 1: The quality is very low and it is difficult to figure out the location of stations.

We have redrawn all figures of our manuscript. Please find the new Figure 1.

(15) Figure 2 & 3: please (1) increase the resolution of the figures; (2) provide some metrics (e.g., RMSE and R2) to evaluate the model performance; (3) give the unit for the y-axis; (4)in the figure caption, as the observation and simulation have different colors, I prefer to use color instead of "solid"/"dash".

(1)We have redrawn all figures of our manuscript. Please find them in the new Figure 3-4. (2)We have added RMSE of curves in the new Figure3. (3) We have added it. (4)We have updated the figures.

(16) Figure 4 & 5 & 6: please (1) increase the resolution; (2) put a horizontal line indicating the design level in the figure.

We have redrawn all figures of our manuscript. Please find them in new Figure 9-11. In Taihu Basin, warning levels of the stations are always used to represent the flood control situation in those areas and the design level for the rivers almost cannot be mentioned.

(17) Table 2: please specify the date in the caption. Is it 1999?

Yes, it is 1999. We have added the date in the caption of Table 2. Please find it in the new Table 2.

(18) Table 3: where are these representative stations in Figure 1? What's the unit?

Figure 1 not only gives the location of the Taihu lake basin, but also gives the locations of the four representative stations, which are used to analyze the contributions of the gate to the vulnerable areas. So these locations have no unit. Please find them in the new Figure 1 (b) and (c).

(19) Why chose 7 days in advance for scenario A1? Any particular reasons? Is the number based on some operational rules?

In Taihu basin, a big basin-wide flood means its return year is between 1 in 20 years and 1 in 50 years. More specifically, when the lake level is up to 4.50m or the average rainfall amount of the whole basin in maximum 30 days is up to 450mm. In Scenario A1' means the proposed gate will be operated in the rising stage of the lake levels with a high possibility to create new record of the lake level based on weather forecast. In the simulation of 1999 flood event, there is about one week before lake level reaches its peak value. Therefore, the estuary gate is to be operated 7 days in advance. Please find the comments to this question in "Page 4 Line 23-25" of our new manuscript.

(20) Table 5: (1) how to calculate the times to close the gate? (2) I think the following equation is valid: net outflow = total outflow - tide intrusion. But why the numbers in the table do not meet this equation? Any explanation for this?

(1) Simulation results can provide the discharges at any cross-section of rivers, and the times to close the gate in Table 5 means the count of discharge change from non-zero to zero; (2) There is a little difference in the equation you mentioned, which was caused by a statistical error. We have corrected it, please find Table 5.

Technical corrections:

(1) Page 2 Line 8: change "ageing" to "aging".

(2) Page 2 Line 29: change "researches" to "research".

(3) Page 3 Line 4: there should be a space character between the number (36895) and the unit ("km^2") similar as Line 12. Please keep this format consistent for other places.

(4) Page 3 Line 8: change "sauce" to "saucer".

(5) Page 3 Line 22: please change "long-term average" to "the long-term average".

(6) Page 3 Line 23: please rephrase "far from the current …". "far from" is difficult to understand.

(7) Page 3 Line 28: change "estuary gate" to "the estuary gate".

(8) Page 4 Line 1-2: please change the format of the citation.

(9) Page 4 Line 8-9: please change "They have since been …" to "Since then, they have been …".

(10) Page 4 Line 9: change "a well-known" to "the well-known".

(11) Page 4 Line 21: change "… gate, and the main Fortran codes of the model is …" to "…gate. The main Fortran codes of the model are …".

(12) Page 4 Line 23: change "stand-alone" to "independently". "stand-alone" is an adjective.

(13) Page 5 Line 1: delete "on".

(14) Page 5 Line 16: change "potential" to "Potential".

(15) Page 6 Line 9: change "potential" to "Potential".

(16) Page 6 Line 15: change "with" to "as".

(17) Page 6 Line 16: change "represent" to "represents".

(18) Page 6 Line 25: change "potential" to "Potential".

(19) Page 6 Line 28: change "was" to "is".

(20) Page 7 Line 8: change "high" to "higher".

(21) Page 7 Line 9: change "are" to "is".

(22) Page 7 Line 13: change "analyses" to "Analyses".

(23) Page 7 Line 14: change "describe" to "describes", change "Rivers" to "River".

(24) Page 7 Line 23: change "describe" to "describes".

(25) Page 7 Line 30: change "impacts" to "impact".

(26) Page 8 Line 11: change "on the different topographies" to "on different topographies".

(27) Page 8 Line 19: change "It is to be noted that …" to "It should be noted that …".

(28) Page 8 Line 20: please rephrase the sentence "…, which make less trouble to the navigation as soon as possible".

(29) Page 8-9: Reference format should be consistent.

(30) Page 14 Table 4: change "summary" to "Summary".

Response to technical corrections:

(1) Page 2 Line 8: "ageing" >> Page 2 Line 10: "aging".

(2) Page 2 Line 29: "researches" >> Page 2 Line 37: "research".

(3) Page 3 Line 4: there should be a space character between the number (36895) and the unit ("km^2") similar as Line 12. >> Page 3 Line 5 "36895 km^2".

(4) Page 3 Line 8: "sauce" >> Page 3 Line 9: "saucer".

(5) Page 3 Line 22: "long-term average" >> Page 3 Line 26: "the long-term average".

(6) Page 3 Line 23: "far from the current …">> Page 3 Line 28: "much higher than the current …".

(7) Page 3 Line 28: "estuary gate" >> Page 3 Line 35: "the estuary gate".

(8) Page 4 Line 1-2: We have changed the format of the citation. Please find it in Page 3 Line 39- Page 4 Line2.

(9) Page 4 Line 8-9: "They have since been …" >> Page 4 Line 10: "Since then, they have been …".

(10) Page 4 Line 9: "a well-known" >> Page 4 Line 10: "the well-known".

(11) Page 4 Line 21: "… gate, and the main Fortran codes of the model is …" >> Page 6 Line 19: "…gate. The main Fortran codes of the model are …".

(12) Page 4 Line 23: "stand-alone" >> Page 5 Line 26: "independently".

(13) Page 5 Line 1: delete "on" >> Page 5 Line 37: "on" has been deleted.

(14) Page 5 Line 16: "potential" >> Page 7 Line 14: "Potential".

(15) Page 6 Line 9: "potential" >> Page 8 Line 6: "Potential".

(16) Page 6 Line 15: "with" >> Page 8 Line 13: "as".

(17) Page 6 Line 16: "represent" >> Page 8 Line 14: "represents".

(18) Page 6 Line 25: "potential" >> Page 8 Line 26: "Potential".

(19) Page 6 Line 28: "was" >> Page 8 Line 30: "is".

(20) Page 7 Line 8: "high" >> Page 9 Line 7: "higher".

(21) Page 7 Line 9: "are" >> Page 9 Line 8: "is".

(22) Page 7 Line 13: "analyses" >> Page 9 Line 13: "Analyses".

(23) Page 7 Line 14: "describe" >> Page 9 Line 14: "describes"; Page 7 Line 14: "Rivers" >> Page 9 Line 14: "River".

(24) Page 7 Line 23: "describe" >> Page 9 Line 24: "describes".

(25) Page 7 Line 30: "impacts" >> Page 9 Line 33: "influence".

(26) Page 8 Line 11: "on the different topographies" >> Page 10 Line 14: "on different topographies".

(27) Page 8 Line 19: "It is to be noted that …" >> Page 10 Line 25: "much attention should be paid to …".

(28) Page 8 Line 20: "…, which make less trouble to the navigation as soon as possible" >> Page 10 Line 25-26: "When the operation rules of the proposed gate is formulated, much attention should be paid to the navigation in the river to mitigate the influence on the shipping as less as possible".

(29) Page 8-9: Reference format should be consistent. >>Page 10-12: Reference format has been adjusted.

(30) Page 14 Table 4: "summary" >> Page 22 Table 4: "Summary".