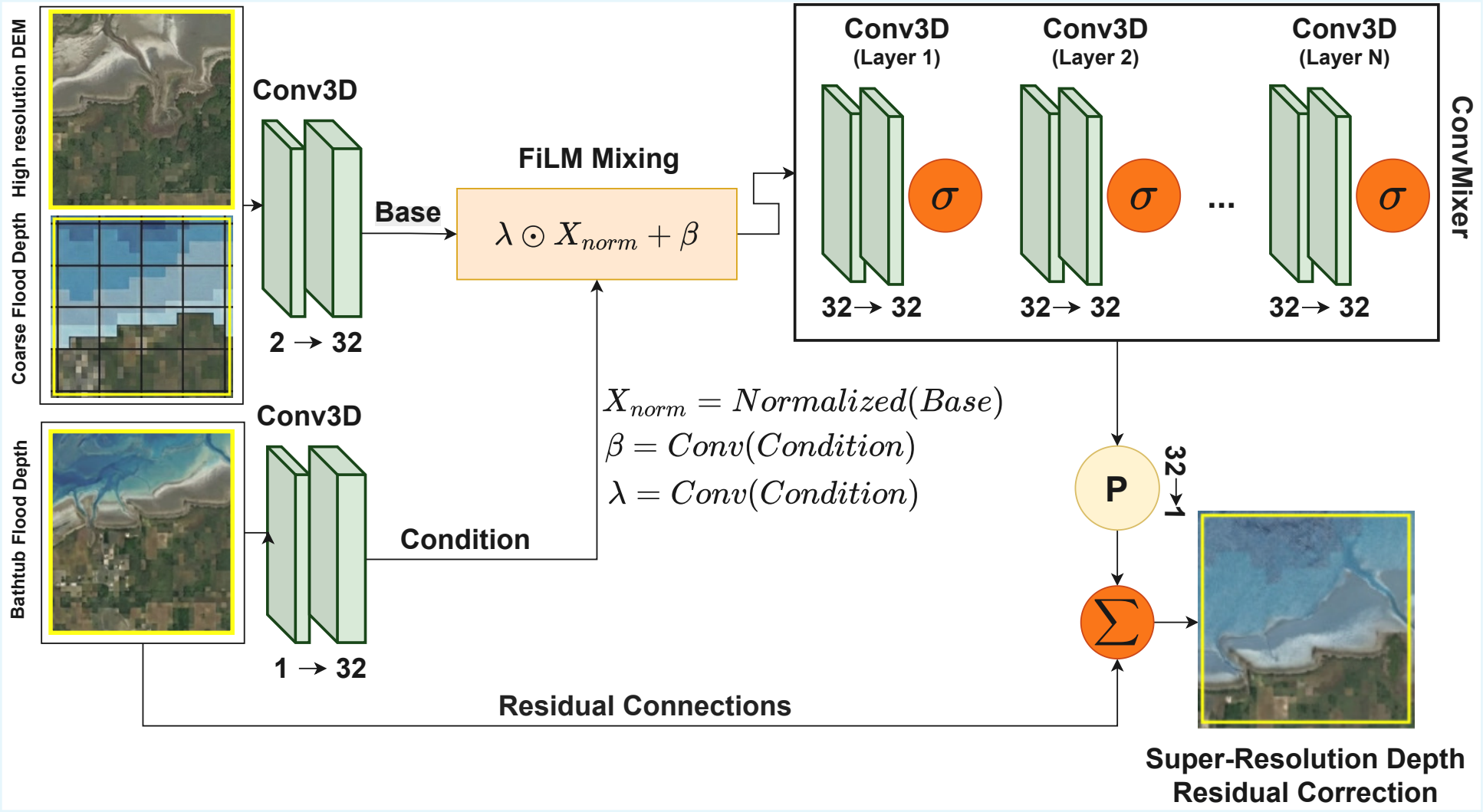
High resolution DEM
Coarse Flood Depth
Bathtub Flood Depth
Conv3D
2 → 32
Base
FiLM Mixing
$\lambda \odot X_{norm} + \beta$
Conv3D
(Layer 1)
Conv3D
(Layer 2)
Conv3D
(Layer N)
σ
σ
...
σ
32→ 32
32→ 32
32→ 32
ConvMixer
$X_{norm} = Normalized(Base)$
$\beta = Conv(Condition)$
$\lambda = Conv(Condition)$
Conv3D
1 → 32
Condition
P
32→1
∑
Residual Connections
Super-Resolution Depth
Residual Correction