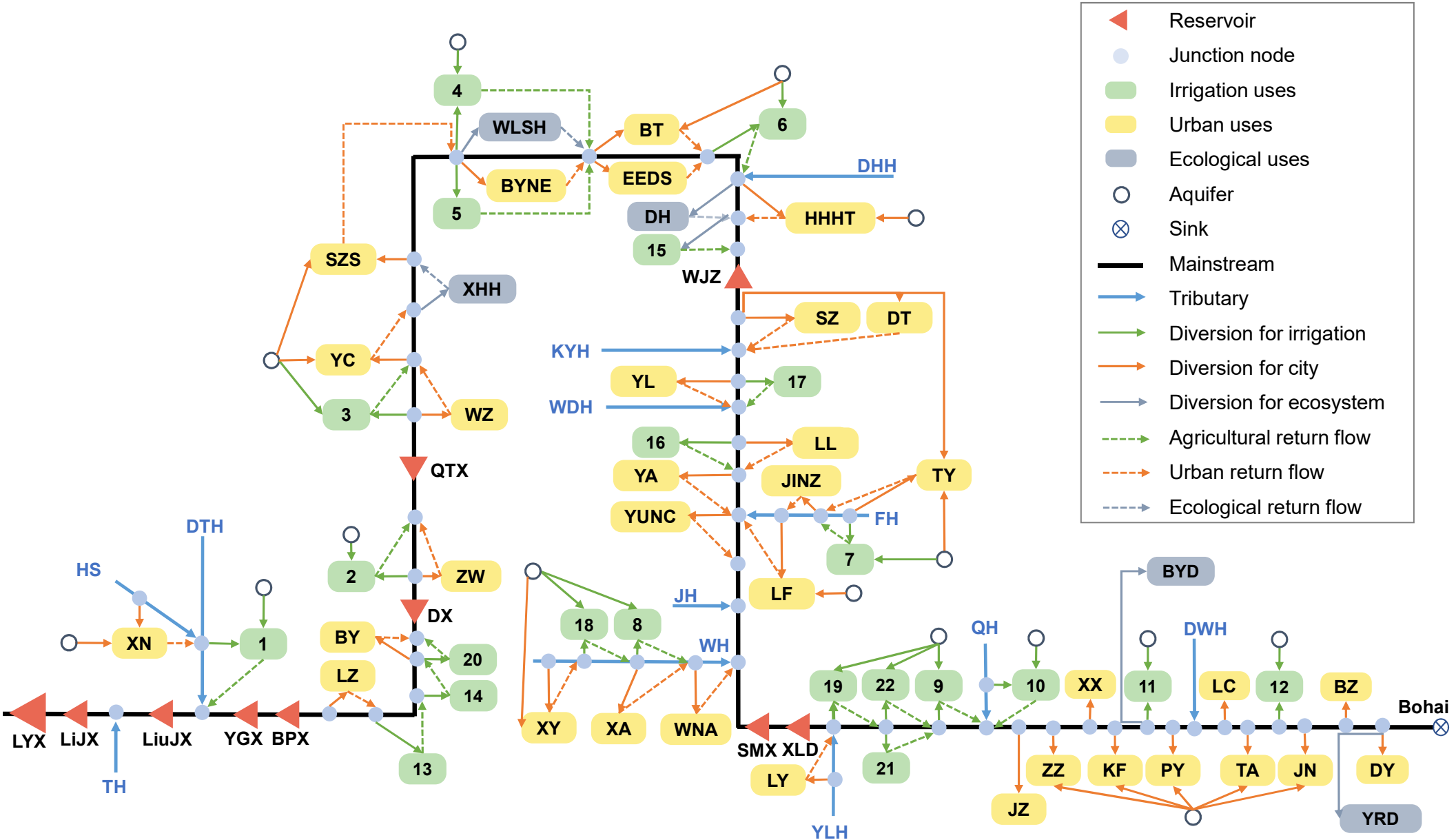
Reservoir
Junction node
Irrigation uses
Urban uses
Ecological uses
Aquifer
Sink
Mainstream
Tributary
Diversion for irrigation
Diversion for city
Diversion for ecosystem
Agricultural return flow
Urban return flow
Ecological return flow
4
WLSH
BT
6
BYNE
EEDS
DHH
5
DH
HHHT
15
WJZ
SZS
XHH
SZ
DT
YC
KYH
YL
17
3
WZ
WDH
16
LL
QTX
YA
JINZ
TY
YUNC
FH
DTH
7
HS
2
ZW
JH
LF
BYD
DX
18
8
XN
1
BY
WH
QH
DWH
20
LZ
14
19
22
9
10
XX
11
LC
12
BZ
Bohai
LYX
LiJX
LiuJX
YGX
BPX
XY
XA
WNA
SMX
XLD
13
21
ZZ
KF
PY
TA
JN
DY
TH
LY
JZ
YLH
YRD