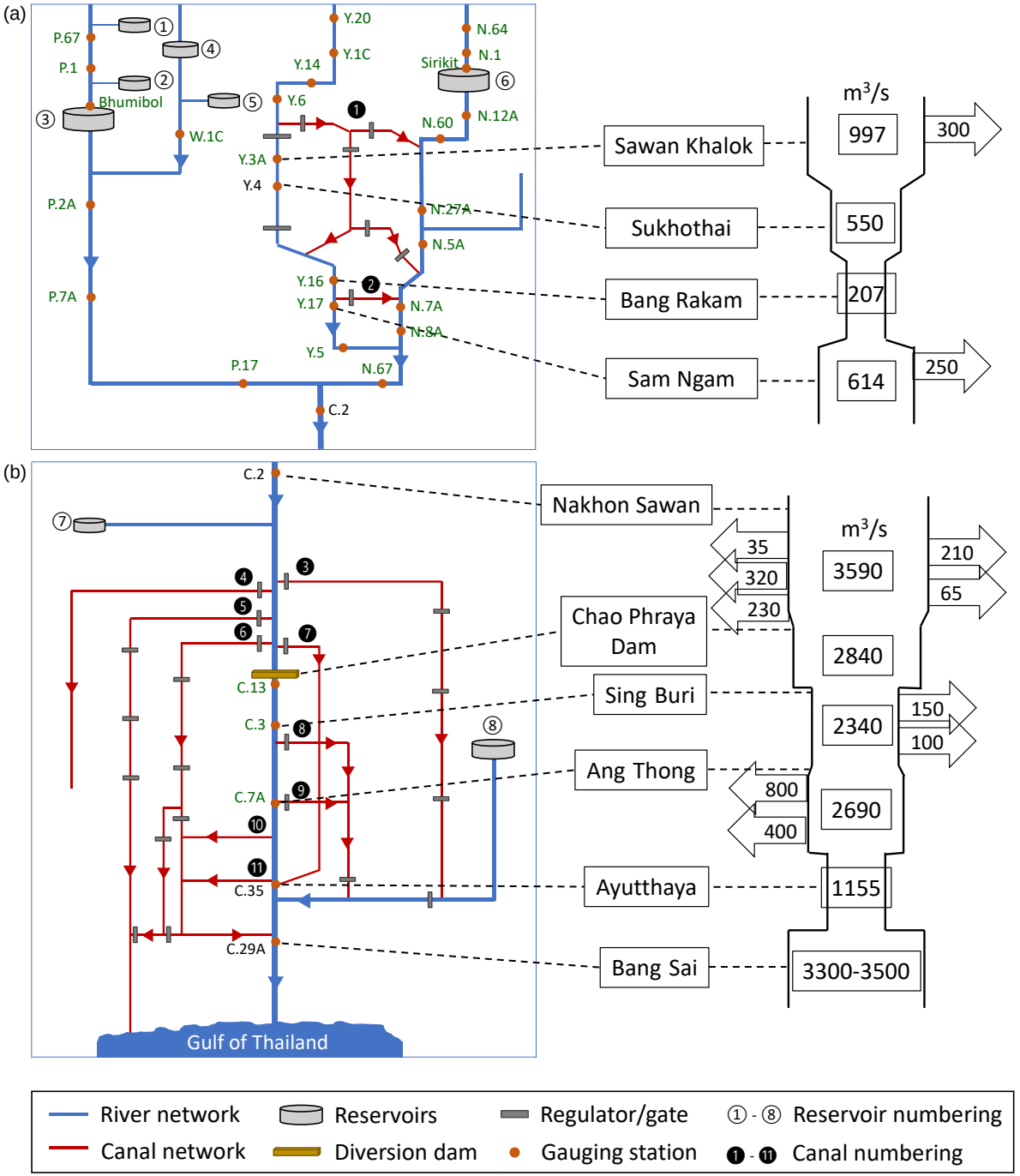
(a)
P.67
P.1
Bhumibol
W.1C
P.2A
P.7A
Y.20
Y.1C
Y.14
Y.6
Y.3A
Y.4
Y.16
Y.17
Y.5
P.17
N.67
C.2
N.64
N.1
Sirikit
N.12A
N.60
N.27A
N.5A
N.7A
N.8A
Sawan Khalok
Sukhothai
Bang Rakam
Sam Ngam
m³/s
997
550
207
614
300
250
(b)
C.2
C.13
C.3
C.7A
C.35
C.29A
Gulf of Thailand
Nakhon Sawan
Chao Phraya Dam
Sing Buri
Ang Thong
Ayutthaya
Bang Sai
m³/s
35
320
230
3590
2840
2340
2690
1155
3300-3500
210
65
150
100
800
400
River network
Canal network
Reservoirs
Diversion dam
Regulator/gate
Gauging station
① - ⑧ Reservoir numbering
❶ - ⓫ Canal numbering