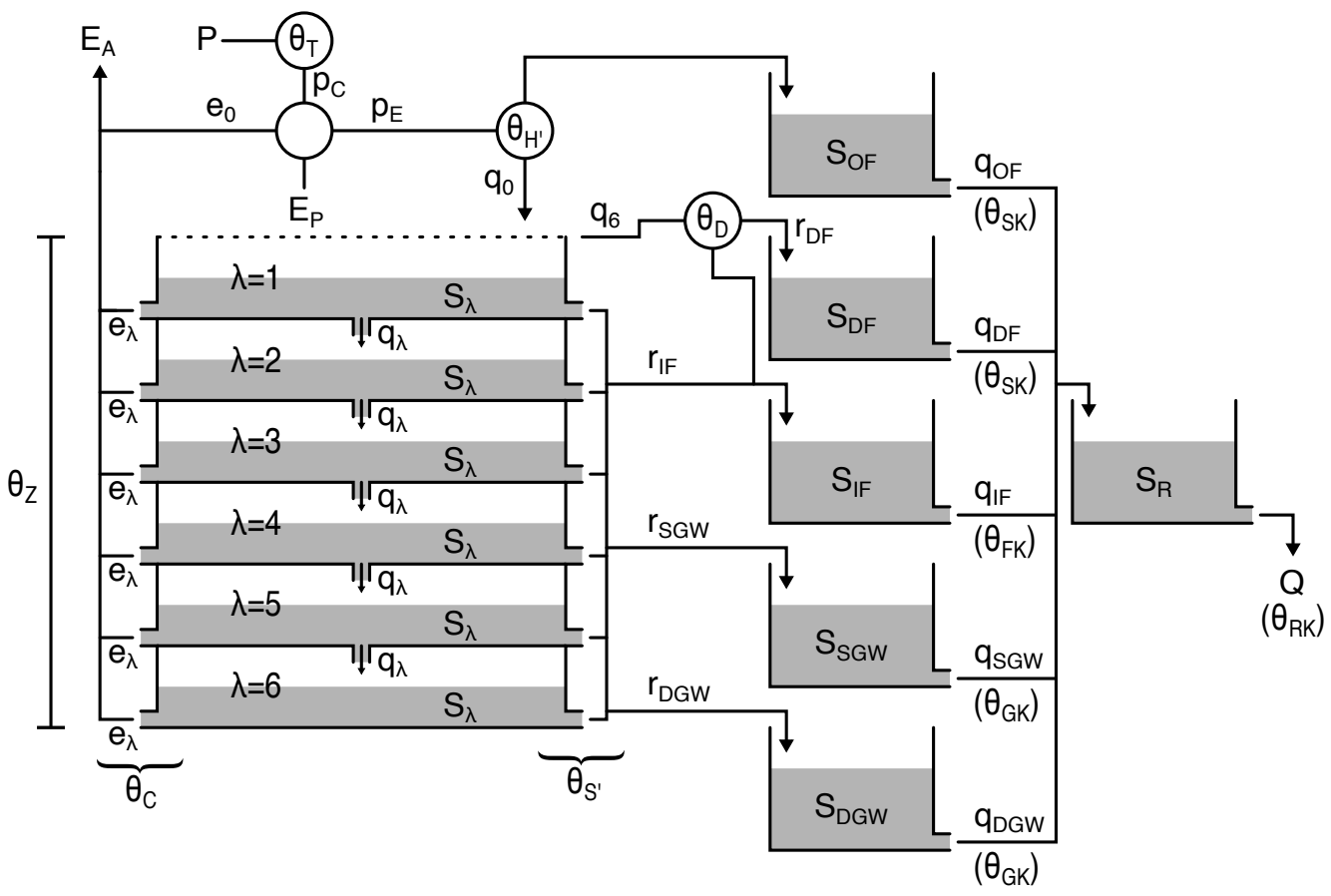
E_A
P
θ_T
p_C
e_0
p_E
θ_H'
E_P
q_0
q_6
θ_D
r_DF
S_OF
q_OF
(θ_SK)
S_DF
q_DF
(θ_SK)
S_IF
q_IF
(θ_FK)
S_SGW
q_SGW
(θ_GK)
S_DGW
q_DGW
(θ_GK)
S_R
Q
(θ_RK)
r_IF
r_SGW
r_DGW
θ_Z
λ=1
λ=2
λ=3
λ=4
λ=5
λ=6
S_λ
e_λ
q_λ
θ_C
θ_S'